NOTES:
1. ONLY IMPORTANT DIMENSIONS ARE SHOWN ON THE DRAWING.
2. ALL GEOMETRY SHOULD CORRESPOND WITH THE CAD MODEL. GENERAL TOLERANCES HAVE TO BE APPLIED TO MISING DIMENSIONS TAKEN FROM CAD MODEL.

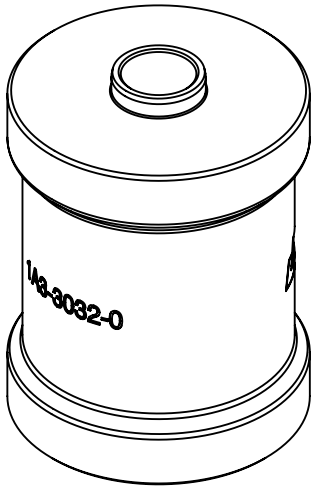

ISOMETRIC VIEW

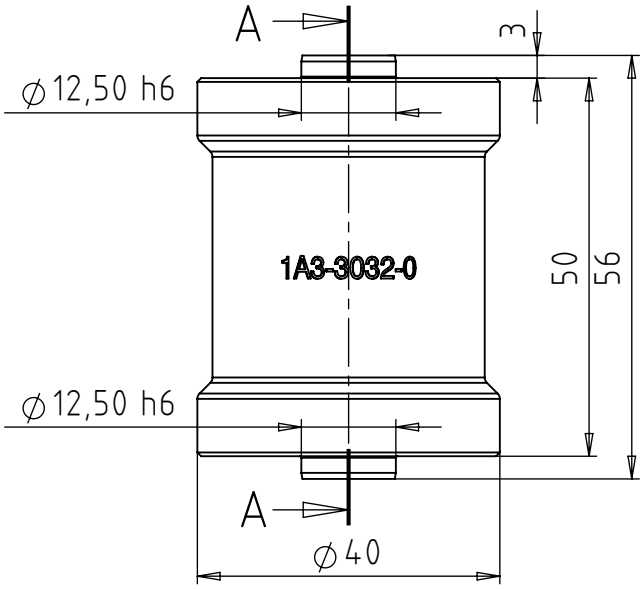

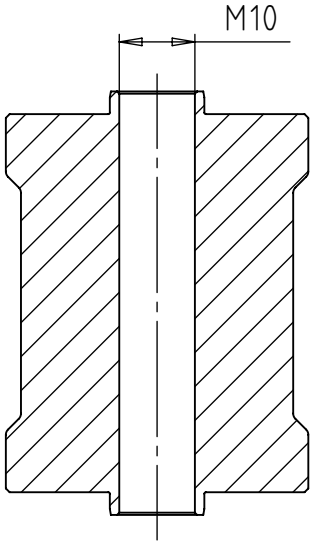

SECTION A-A

No.	DATE	REVISION RECORD	SIGN.
-	24.02.2025.	NEW	S.S.

ISO TOL.

PROJ. EUROP.

SCALE: 1:1

DO NOT SCALE DRAWING

	NAME:	SIGNATURE:	DATE:
DRAWN BY:	Sinko S.		24.02.2025.
DESIGNED BY:			
CONTROL. BY:			
APPROV. BY:	Sinko S.		24.02.2025.

MATERIAL: CORROSION RESISTANT STEEL

WEIGHT: 404 g

RAW DIM.: -

HEAT TREATMENT: 53 HRc

GENERAL TOLERANCES FOR DIMENSIONS ACC. ISO2768-1: f
GEOMETRICAL TOLERANCES ACC. ISO 2768-2: fH
INDICATIONS OF FORM AND POSITION ACC. TO ISO 1101
SURFACE ROUGHNESS INDICATIONS ACC. TO ISO 1302

PERMISSIBLE DEVIATIONS FOR LINEAR DIMENSIONS ISO 2768-1 f EXTRACT	SIZE RANGE	Up to 3	> 3 to 6	> 6 to 30	> 30 to 120	> 120 to 315	> 315 to 1000	> 1000 to 2000
	LINEAR TOLERANCE	±0,05	±0,05	±0,10	±0,15	±0,20	±0,30	±0,50

PART NAME: MZ CLAMP SUPPORT THREAD D40 H50

PRODUCT: MULTIZERO SYSTEM

PART NUMBER: 1A3-3032-0

DRAWING NUMBER: 1A3-3032-0-C

PROJECT NO.:	POSITION:	NO. OF PARTS:	PAPER SIZE:
-	-	-	A4

SINCO
Slovenska vas 4 j,
8261 Jesenice na Dol.,Slovenija
Tel: +386 (0)7 49 57 371

PAGE: 1

PAGES: 1

©Copyright 2021 SINCO Proprietary and confidential information:
The information contained in this drawing is sole property of Sinco. Any reproduction in part or as a whole of the information without the written permission of Sinco is prohibited.