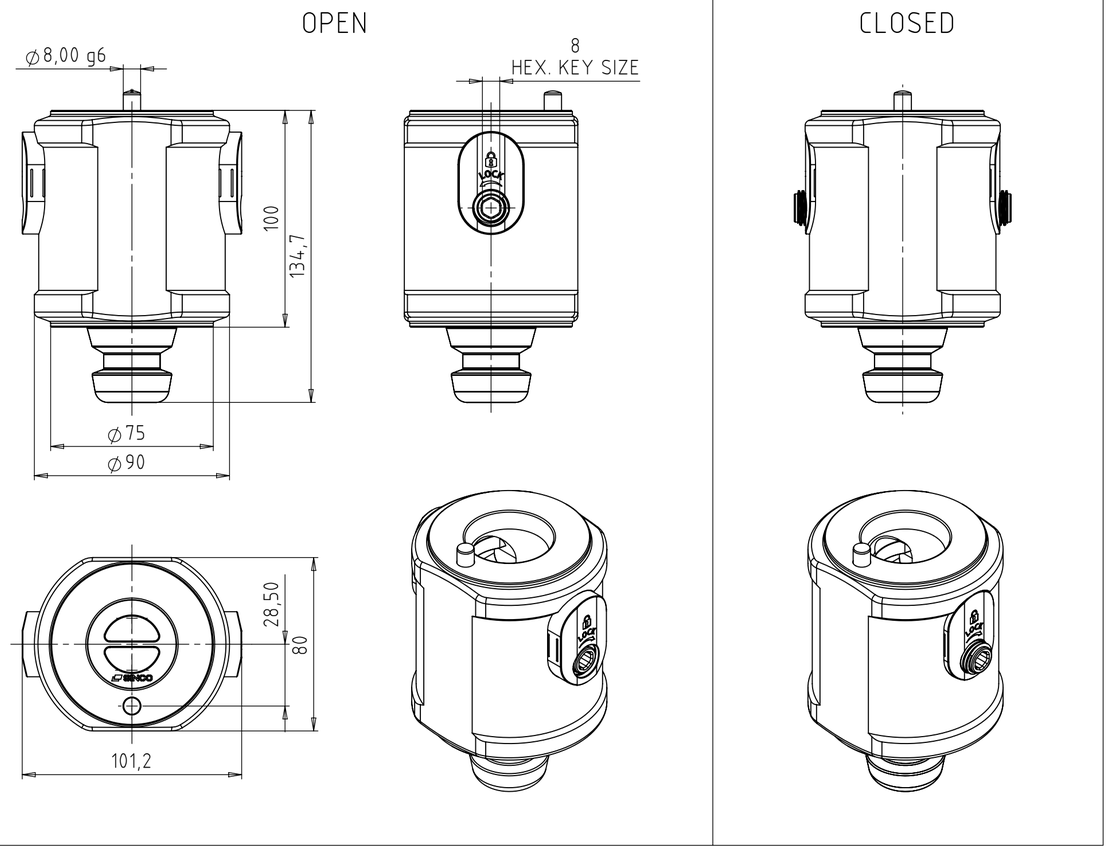

NOTES:
1. ONLY IMPORTANT DIMENSIONS ARE SHOWN ON THE DRAWING.
2. ALL GEOMETRY SHOULD CORRESPOND WITH THE CAD MODEL. GENERAL TOLERANCES HAVE TO BE APPLIED TO MISING DIMENSIONS TAKEN FROM CAD MODEL.
3. ASSEMBLY MUST BE FREE OF BURR AND IMPERFECTIONS THAT MIGHT AFFECT FIT OR FUNCTION.
4. CLAMPING FORCE: 15 kN max.
5. CLAMPING TORQUE MAX.: 50 Nm MUST NOT BE EXCEEDED.
6. SURFACES MUST BE VISUALLY UNIFORM AND WITHOUT DAMAGES AND IMPERFECTIONS SUCH AS SCRATCHES, STAINS AND BURR.
7. CHECK FUNCTION AND GREASE REGULARY. RECOMMENDED LUBRICANT MOLYKOTE TP42 OR SIMILAR.
8. PARTS LIST DOCUMENT: 3B6-1045-0-P

No.	DATE	REVISION RECORD	SIGN.
-	21.03.2025.	NEW	S.S.

ISO TOL.

PROJ. EUROP.

SCALE: 1:2

	NAME:	SIGNATURE:	DATE:
DRAWN BY:	Sinko S.		21.03.2025.
DESIGNED BY:			
CONTROL BY:			
APPROV. BY:	Sinko S.		21.03.2025.

MATERIAL: –
WEIGHT: 4.16 kg
RAW DIM.: –
HEAT TREATMENT: –

GENERAL TOLERANCES FOR DIMENSIONS ACC. ISO2768-1: f
GEOMETRICAL TOLERANCES ACC. ISO 2768-2: fH
INDICATIONS OF FORM AND POSITION ACC. TO ISO 1101
SURFACE ROUGHNESS INDICATIONS ACC. TO ISO 1302

PERMISSIBLE DEVIATIONS FOR LINEAR DIMENSIONS ISO 2768-1 EXTRACT	SIZE RANGE	Up to 6	> 6 to 30	> 30 to 120	> 120 to 315	> 315 to 1000	> 1000 to 2000
	LINEAR TOLERANCE	±0,05	±0,05	±0,1	±0,15	±0,30	±0,50

DO NOT SCALE DRAWING

PART NAME: MZ RISER W80 EXTENSION H100
PRODUCT: MULTIZERO RISER
PART NUMBER: 3B6-1048-0
DRAWING NUMBER: 3B6-1048-0-C
PROJECT NO.: –
POSITION: –
NO. OF PARTS: –
PAPER SIZE: A2
PAGE: 1
PAGES: 1

SINCO
Slovenska vas 4 j.
8261 Jesenice na Dol., Slovenija
Tel: +386 (0)7 49 57 371

©Copyright 2021 SINCO Proprietary and confidential information:
The information contained in this drawing is sole property of Sinco. Any reproduction in part or as a whole of the information without the written permission of Sinco is prohibited.